RH1600-CG RESPONDER™ MAIN SCHEMATIC

FOR USE WITH WHELEN CenCom Gold™

MNSTAR PATENTED TECHNOLOGY
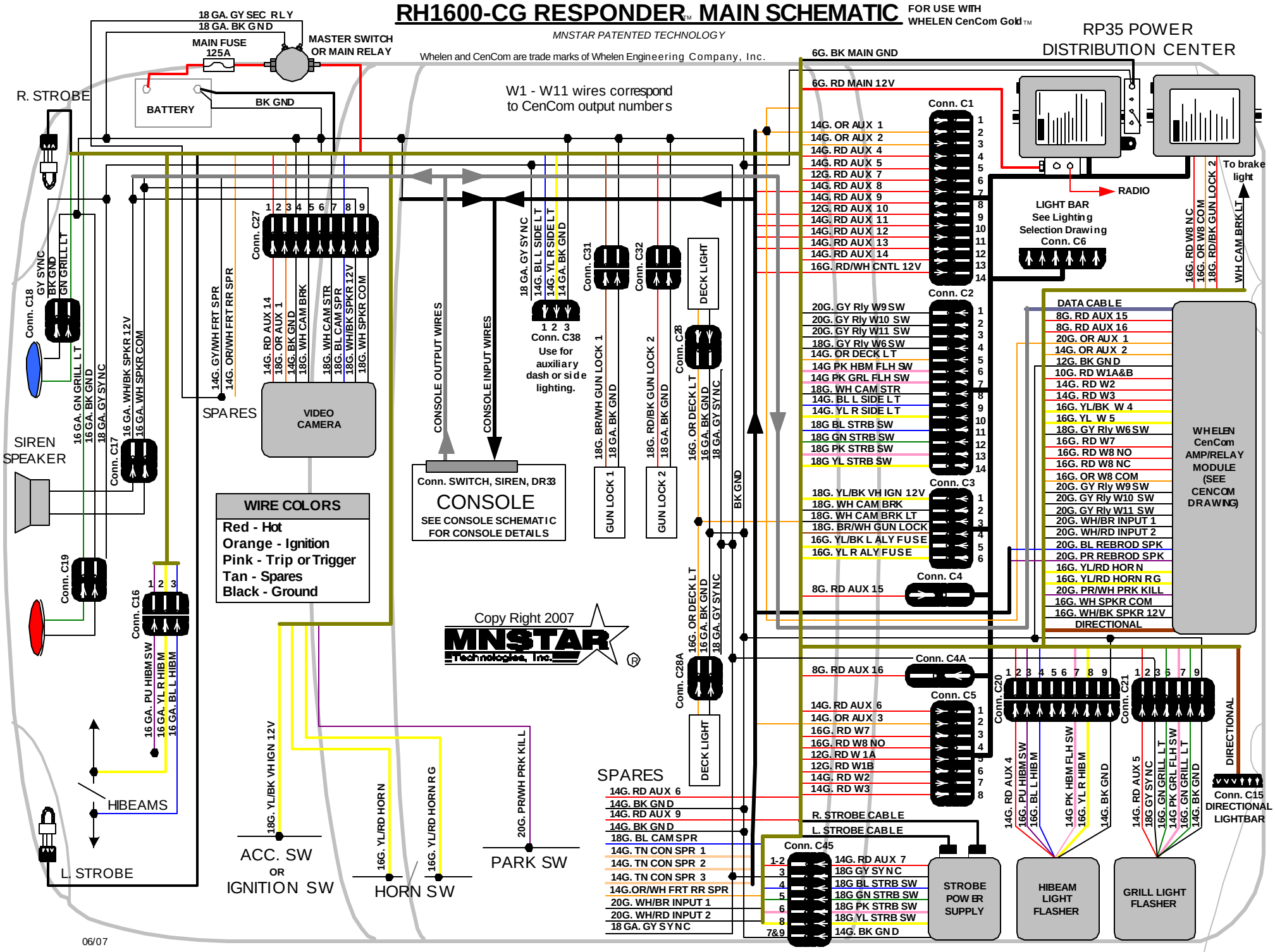
Whelen and CenCom are trade marks of Whelen Engineering Company, Inc.