CRH204 CONSOLE WIRE SCHEMATIC
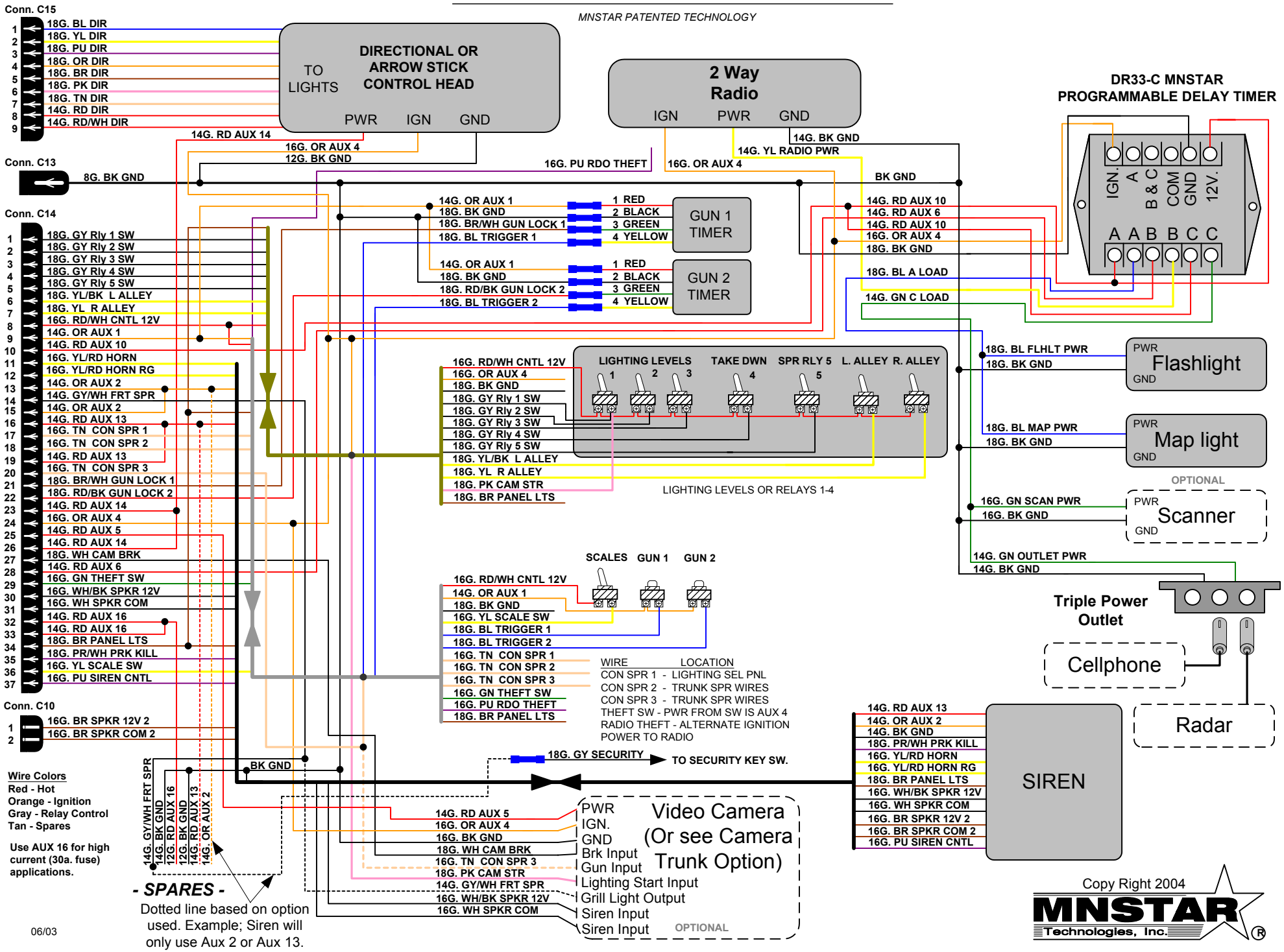
MNSTAR PATENTED TECHNOLOGY